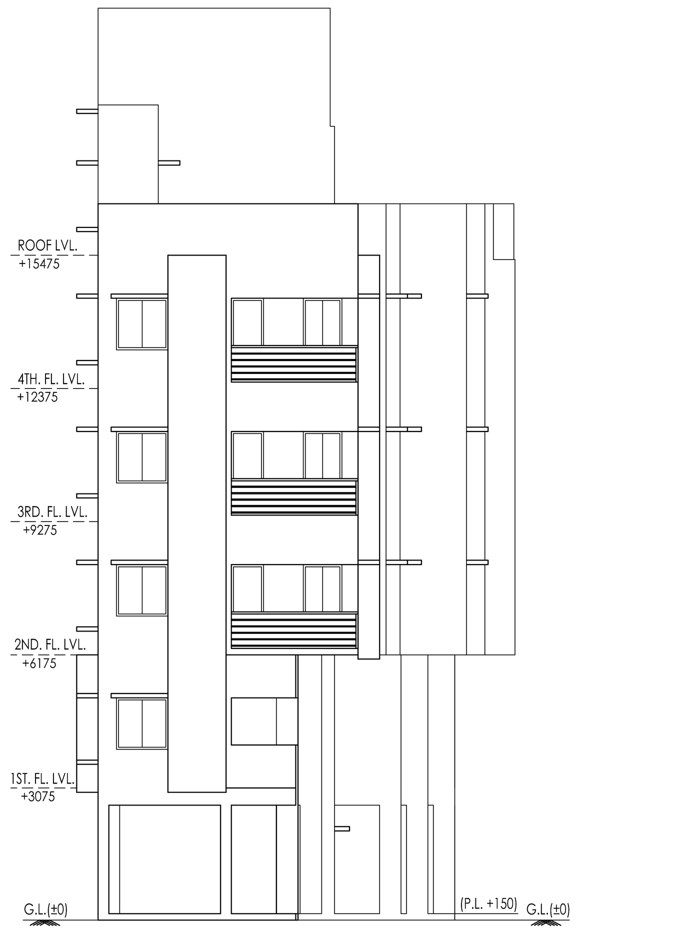

FRONT SIDE ELEVATION
SCALE - 1: 100

RIGHT SIDE ELEVATION
SCALE - 1: 100

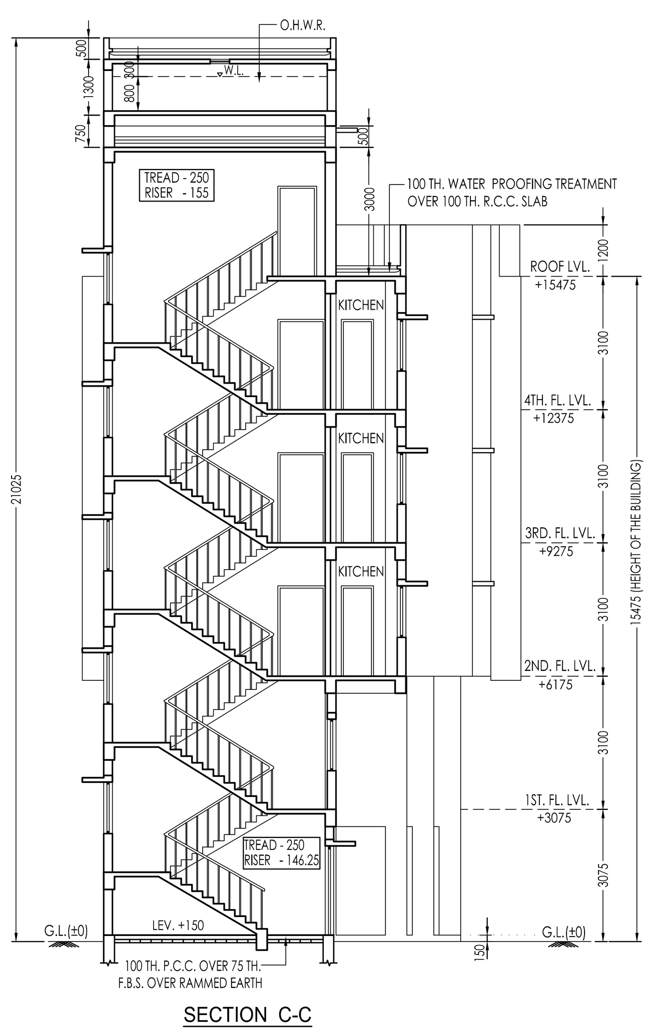

SECTION C-C
SCALE - 1: 100

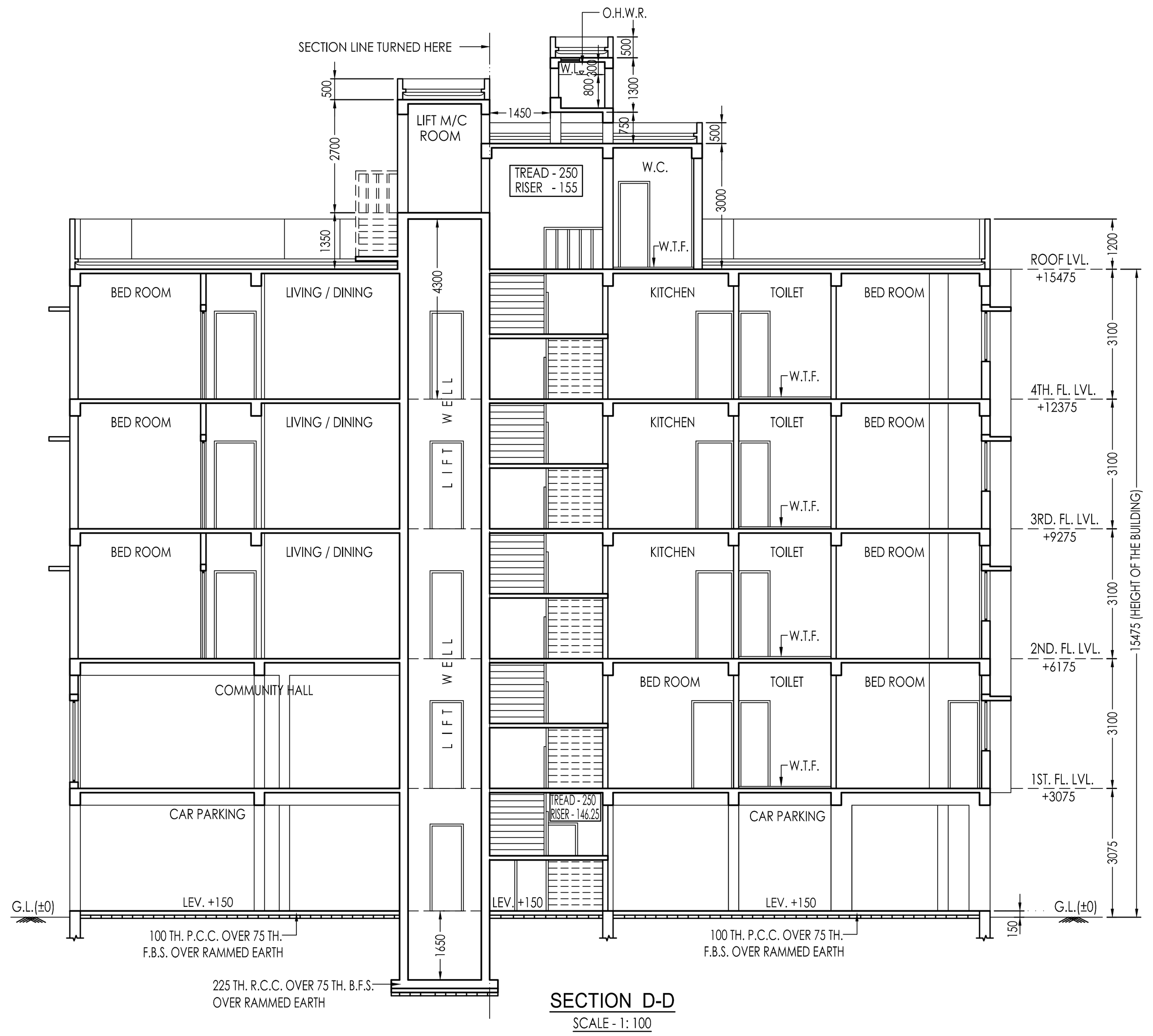

SECTION D-D
SCALE - 1: 100

DOOR & WINDOW SCHEDULE						
TYPE	WIDTH	HEIGHT		TYPE	WIDTH	HEIGHT
D	1200	2100		W1	1800	1200
D1	1100	2100		W2	1500	1200
D2	1000	2100		W3	1200	1200
D3	900	2100		W4	1000	1200
D4	750	2100		W4A	1000	1000
SD1	1800	2100		W4B	1000	1950
				W5	900	1200
				W5A	900	1000
				W6	600	1000
				W7	3400	1950
				W8	2775	1950
				W9	2475	1950
				W10	1500	1950

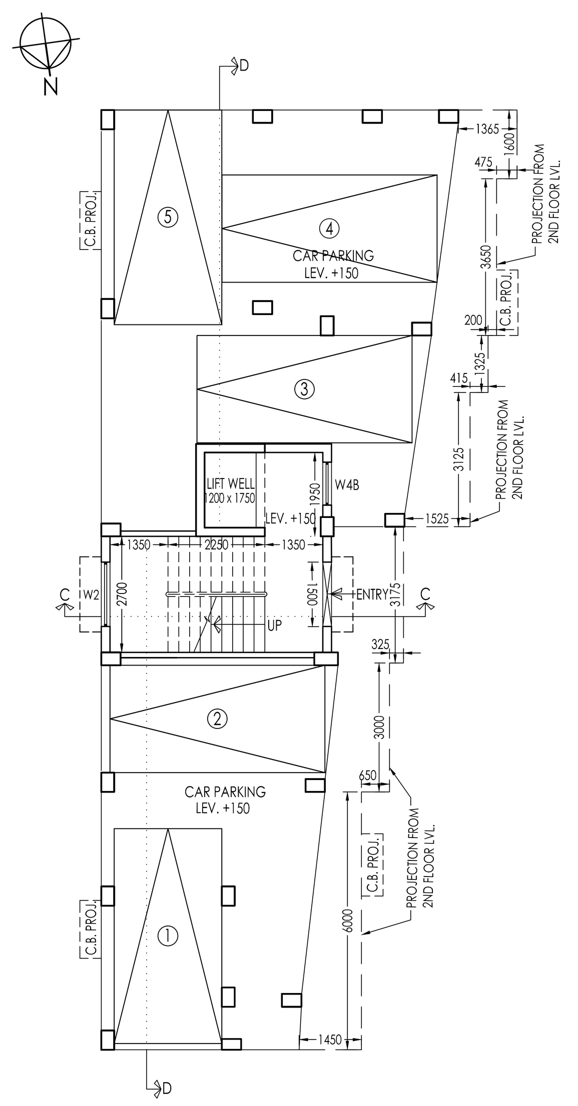

GROUND FLOOR PLAN
REAR BLOCK - B (G+IV)

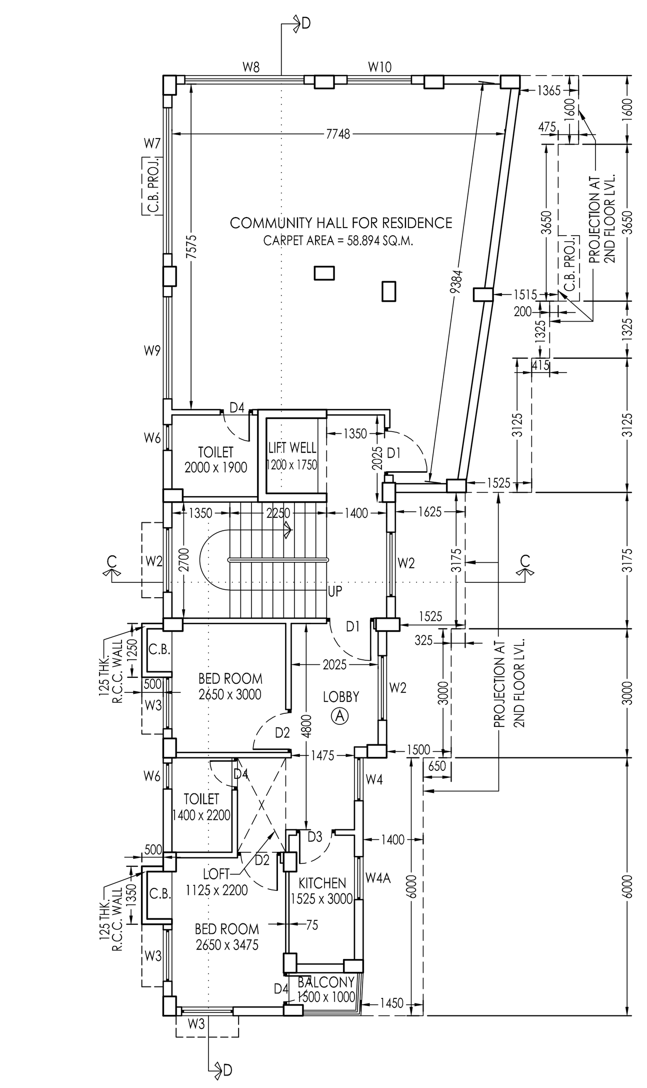

1ST FLOOR PLAN
REAR BLOCK - B (G+IV)

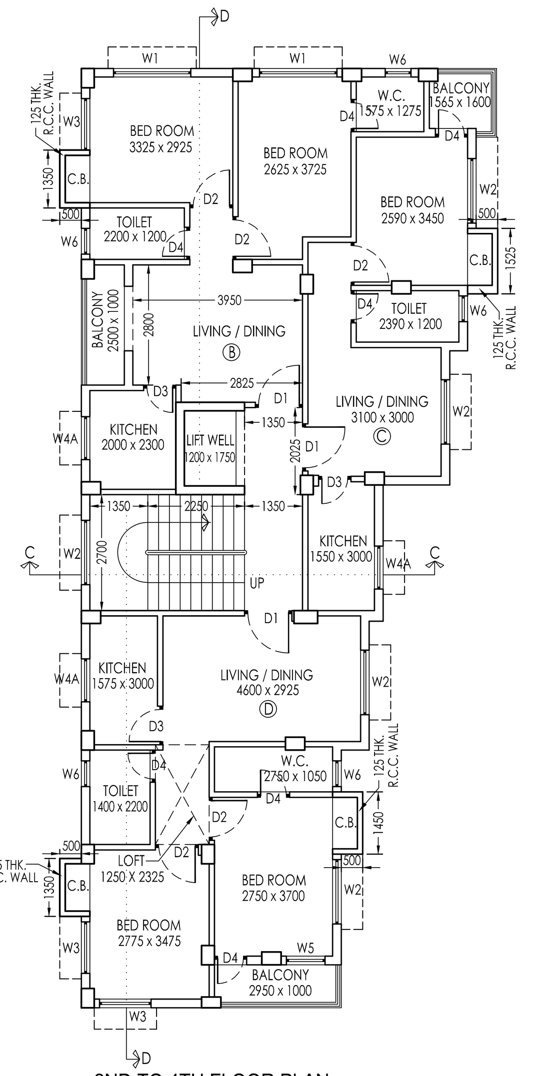

2ND TO 4TH FLOOR PLAN
REAR BLOCK - B (G+IV)

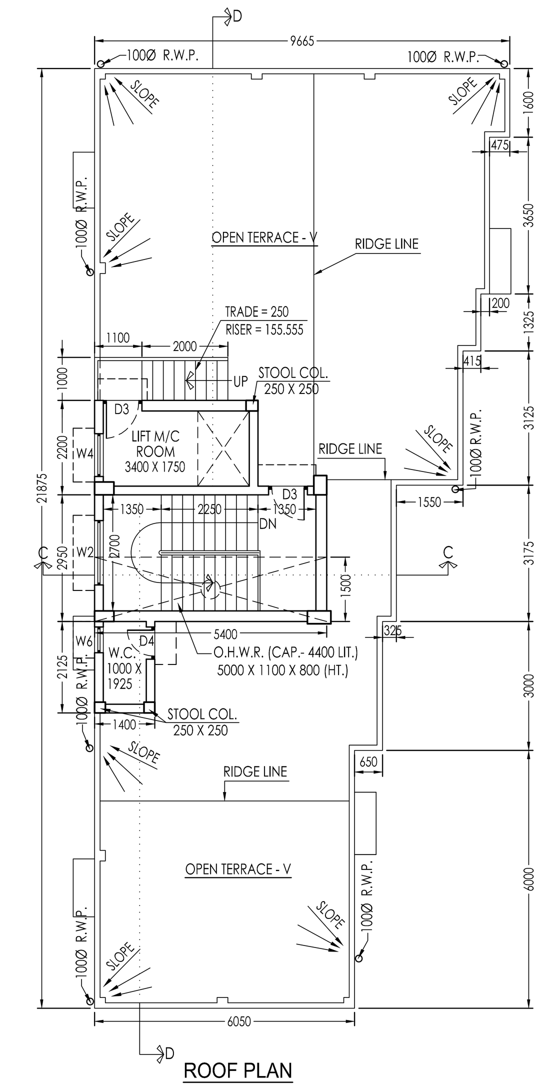

ROOF PLAN
REAR BLOCK - B (G+IV)

PART-A

ASSESSEE NO:- 41-126 -18 - 0125 - 9

DET. OF DEED CONVEYANCE :
BOOK NO.:- I
VOLUME NO.:- 1602-2017
PAGE FROM.:- 206541 TO 206611
BEING NO.:- 160207173
YEAR :- 2017
D.S.R. - II SOUTH 24-PARAGANAS

DET. OF BOUNDARY DECLARATION :
BOOK NO.:- I
VOLUME NO.:- 1602-2022
PAGE FROM.:- 394095 TO 394109
BEING NO.:- 160211436
YEAR :-2022
D.S.R. -II SOUTH 24-PARAGANAS

DET. OF SIDE STRIP GIFT :
BOOK NO.:- I
VOLUME NO.:- 1602-2022
PAGE FROM.:- 348775 TO 348789
BEING NO.:- 160209450
YEAR :- 2022
D.S.R. - II SOUTH 24-PARAGANAS

DET. OF SPLAYED CORNER :
BOOK NO.:- I
VOLUME NO.:- 1602-2022
PAGE FROM.:- 345688 TO 345702
BEING NO.:- 160209449
YEAR :- 2022
D.S.R. - II SOUTH 24-PARAGANAS

DET. OF DEVELOPMENT POWER OF ATTORNEY :
BOOK NO.:- I
VOLUME NO.:- 1602-2017
PAGE FROM.:- 279623 TO 279650
BEING NO.:- 160209448
YEAR :-2017
D.S.R. - II SOUTH 24-PARAGANAS

DET. OF A.A.I. NOC. :-
NOC. ID. :-BEHA/EAST/B/092520/480408
DATE:- 05/10/2020, VALID UP TO:- 03/10/2028
SITE ELEVATION:- (AMSL) - 4.21M.
PERMISSIBLE TOP ELEVATION:- (AMSL) - 34.21M.

U.L.C. NO. - 2378 ULC/Alip/2022 - U.L. , DATED - 04.08.2022.

NO. OF STORIED : G+VI (FRONT BLOCK)
: G+IV (REAR BLOCK)

i) NO OF TENEMENTS : 28 NOS. (FRONT BLOCK)
: 10 NOS. (REAR BLOCK)

ii) SIZE OF TENEMENTS : a) BELOW 50 SQ.M. - 03 NOS.
: b) 50 SQ.M. TO 75 SQ.M. - 24 NOS.
: c) 75 TO 100 SQM. - 11 NOS.

AREA OF PLOT :-
AS PER DOCUMENT :
1270.903 SQ.M. (19K. - 00CH. - 00SQ.FT.)
AS PER BOUNDARY DECLARATION :
1266.617 SQ.M. (18 K - 14 CH. - 43.865 SQ.FT.)

PART-B

1. GROUND COVARAGE
a. PERMISSIBLE :- 633.309 SQ.M. (50 %)
b. PROPOSED GROUND COVERAGE :-
384.132 SQ.M.(FRONT BLOCK) +166.420 SQ.M.(REAR BLOCK) = 550.552 SQ.M. (43.466%)

2. PROPOSED HEIGHT : 21.475 M. (FRONT BLOCK)
: 15.475 M. (REAR BLOCK)

3. ROAD WIDTH:- 9.2 M.

4. FRONT BLOCK :-
i) GROUND FLOOR AREA = 259.498+124.634 = 384.132 SQ.M.
ii) 1ST FLOOR AREA = 238.249+124.958 = 363.208 SQ.M.
iii) 2ND TO 6TH FLOOR AREA = 372.322 SQ.M. (PER FLOOR AREA)
iv) NET FLOOR AREA (EXCLUDING THE SPACE EXEMPTED IN THIS RULE) = 2346.735 SQ.M.
v) TOTAL EXEMPTED AREA = 262.215 SQ.M.
vi) GROSS FLOOR AREA (INCLUDING THE SPACE EXEMPTED IN THIS RULE) = 2608.95 SQ.M.
vii) PERMISSIBLE AREA FOR PARKING :- 325 SQ.M.
viii) PROVIDED AREA OF PARKING :- 188.613 SQ.M.
ix) STAIR HEADROOM AREA = 38.03 SQ.M.
x) OVER HEAD WATER TANK AREA = 15.73 SQ.M.
xi) LIFT MACHINE ROOM AREA = 17.939 SQ.M.
xii) LIFT MACHINE ROOM STAIR AREA = 6.3 SQ.M.
xiii) ROOF W.C. AREA = 2.975 SQ.M.
xiv) ROOF STRUCTURE AREA = 80.974 SQ.M.
xv) OPEN TERRACE AREA = 378.132 SQ.M.
xvi) TOTAL AREA OF C.B. = 40.675 SQ.M.
xvii) TOTAL AREA OF LOFT = 38.101 SQ.M.

5. REAR BLOCK :-
i) GROUND FLOOR AREA :- 136.867 SQ.M.
ii) 1ST FLOOR AREA :- 133.164 SQ.M.
iii) 2ND FLOOR TO 4TH FLOOR AREA :- 164.32 SQ.M. (PER FLOOR AREA)
iv) NET FLOOR AREA (EXCLUDING THE SPACE EXEMPTED IN THIS RULE) = 682.616 SQ.M.
v) TOTAL EXEMPTED AREA = 80.393 SQ.M.
vi) GROSS FLOOR AREA (INCLUDING THE SPACE EXEMPTED IN THIS RULE) = 763.009 SQ.M.
vii) PERMISSIBLE AREA FOR PARKING :- 50 SQ.M.
viii) PROVIDED AREA OF PARKING :- 114.415 SQ.M.
ix) STAIR HEADROOM AREA = 16.250 SQ.M.
x) OVER HEAD WATER TANK AREA = 8.099 SQ.M.
xi) LIFT MACHINE ROOM AREA = 8.360 SQ.M.
xii) LIFT MACHINE ROOM STAIR AREA = 3.1 SQ.M.
xiii) ROOF W.C. AREA = 2.975 SQ.M.
xiv) ROOF STRUCTURE AREA = 38.784 SQ.M.
xv) OPEN TERRACE AREA = 166.420 SQ.M.
xvi) TOTAL AREA OF C.B. = 9.811 SQ.M.
xvii) TOTAL AREA OF LOFT = 11.193 SQ.M.

6. TOTAL CAR PARKING AREA : (188.613+114.415) = 303.028 SQ.M.

7. F.A.R
i) PERMISSIBLE= 2.25
ii) PROPOSED F.A.R.
TOTAL NET FLOOR AREA(BL- 1 + BL- 2)= 3029.34 SQ.M.
BONUS CAR PARKING AREA (BL-1 + BL-2) = 303.028 SQ.M.
TOTAL FLOOR AREA FOR F.A.R = 3029.34-303.028 = 2726.312 SQ.M.

PROPOSED F.A.R = 2726.312 / 1266.617 = 2.152

8. PARKING (FRONT & REAR BLOCK)
i) REQUIRED = 15 NOS.
ii) PROVIDED = 15 NOS.
PERMISSIBLE TREE COVER AREA= 109.553 SQ.M.
PROPOSED TREE COVER AREA= 88.477+21.266 = 109.743 SQ.M.

9.PROPOSED COVERED AREA (IN SQ.M.) :

i) FRONT BLOCK :-

FLOOR MKD.	COVERED AREA	CUTOUT	GROSS COV. AREA	EXEMPTED AREA: LIFT LOBBY	EXEMPTED AREA: STAIR AREA	NET FLOOR AREA
GR. FLOOR	384.132		378.132	5.985	31.500	340.648
1ST FLOOR	384.132	20.924	363.208	5.955	31.500	325.754
2ND FLOOR	384.132	11.81	372.322	5.955	31.500	334.867
3RD FLOOR	384.132	11.81	372.322	5.955	31.500	334.867
4TH FLOOR	384.132	11.81	372.322	5.955	31.500	334.867
5TH FLOOR	384.132	11.81	372.322	5.955	31.500	334.867
6TH FLOOR	384.132	11.81	372.322	5.955	31.500	334.867
TOTAL	2688.924	79.974	2608.95	41.715	220.5	2346.735 SQ.M.

ii) REAR BLOCK :-

FLOOR MKD.	COVERED AREA	CUTOUT	GROSS COV. AREA	EXEMPTED AREA: LIFT LOBBY	EXEMPTED AREA: STAIR AREA	NET FLOOR AREA
GR. FLOOR	136.867	----	136.867	2.632	13.365	120.87
1ST FLOOR	135.279	2.1	133.179	2.734	13.365	117.08
2ND FLOOR	166.420	2.1	164.320	2.734	13.365	148.221
3RD FLOOR	166.420	2.1	164.320	2.734	13.365	148.221
4TH FLOOR	166.420	2.1	164.320	2.734	13.365	148.221
TOTAL	771.406	8.4	763.006	13.568	66.825	682.613 SQ.M.

10. FRONT BLOCK TENEMENTS & CAR PARKING CALCULATION :-

(A) RESIDENTIAL :

MARKED	TENEMENT SIZE	PROPORTIONAL AREA TO BE ADDED	ACTUAL TENEMENT AREA	NO. OF TENEMENT	REQUIRED CAR PARKING
A	79.751 SQ.M.	14.712 SQ.M	94.463 SQ.M	06 NOS.	3
B	55.302 SQ.M.	10.202 SQ.M	65.504 SQ.M	06 NOS.	4
C	60.846 SQ.M.	11.224 SQ.M	72.070 SQ.M	06 NOS.	
D	50.615 SQ.M.	9.337 SQ.M	59.952 SQ.M	05 NOS.	
E	80.840 SQ.M.	14.913 SQ.M	95.753 SQ.M	05 NOS.	2

CAR REQD. FOR RESIDENTIAL PORTION (FRONT BLOCK) = 09 NOS.
GROUND FLOOR CARPET AREA OF OFFICE SPACE = 97.813 SQ.M.
1ST FLOOR CARPET AREA OF OFFICE SPACE = 106.873 SQ.M.
TOTAL CARPET AREA OF OFFICE SPACE = 204.686 SQ.M.
CAR PARKING REQD. FOR OFFICE SPACE = 04 NOS.
TOTAL REQUIRED CAR PARKING :- (09 + 04) = 13 NOS.

11. REAR BLOCK TENEMENTS & CAR PARKING CALCULATION :-

(A) RESIDENTIAL :

MARKED	TENEMENT SIZE	PROPORTIONAL AREA TO BE ADDED	ACTUAL TENEMENT AREA	NO. OF TENEMENT	REQUIRED CAR PARKING
A	44.865 SQ.M.	8.517 SQ.M	53.382 SQ.M	01 NO.	1
B	53.243 SQ.M.	10.107 SQ.M	63.351 SQ.M	03 NOS.	
C	35.868 SQ.M.	6.809 SQ.M	42.677 SQ.M	03 NOS.	
D	57.941 SQ.M.	10.999 SQ.M	68.940 SQ.M	03 NOS.	

CAR REQD. FOR RESIDENTIAL PORTION (REAR BLOCK) = 01 NOS.
1ST. FLOOR CARPET AREA OF COMMUNITY HALL = 58.894 SQ.M.
CAR PARKING REQD. FOR COMMUNITY HALL = 01 NOS.
TOTAL REQUIRED CAR PARKING :- (1 + 1) = 02 NOS.

SPACE FOR K.M.C. USES

B.P. NO.:-2023160293 DATE:-30.09.2023 VALID UP TO:- 29.09.2028

MBC MEETING NO. 618 MBC MEETING DATE: - 30.05.2023
MBC RESOLUTION NO. 61/23-24

SANJIT MAJI Digitally signed by SANJIT MAJI Date: 2023.10.03 18:08:41 +05'30'

DIGITAL SIGNATURE OF A.E.

SHIBNATH DAS Digitally signed by SHIBNATH DAS Date: 2023.10.03 18:15:40 +05'30'

DIGITAL SIGNATURE OF E.E.

SPECIFICATIONS & NOTES:-

GRADE OF CONCRETE-M 20 & STEEL Fe 500 PROPORTION OF MORTAR FOR 200 OR 250 TH. B/W=1:6 PROPORTION OF MORTAR FOR 125 & 75 TH. B/W=1:4 MIX. PROPORTION OF MORTAR D.P.C.=1:2:4 MIX. PROPORTION OF MORTAR FOR L.T=2:2:7 ALL DIMENSIONS ARE IN M.M SCALE-1:100, OTHERWISE MENTIONED ALL. 125 TH. CUP BOARD WALL IS R.C.C. WALL. DEPTH OF THE S.U.G.W.R. & SEPTIC TANK WILL NOT EXCEED THE DEPTH OF THE BLDG. FOUNDATION

DECLARATION OF ARCHITECT

I, DO HERE BY CERTIFY ON THIS PLAN IS SELF WITH FULL RESPONSIBILITY THAT THE BUILDING PLAN HAS BEEN DRAWN UP AS PER PROVISION OF K.M.C. BUILDING RULES 2009,AS AMENDED FROM TIME TO TIME AND THAT THE SITE CONDITION INCLUDING THE WIDTH OF ABUTTING ROAD MAINTAINED BY K.M.C. CONFORM WITH THE PLAN AND THAT THE PREMISES IS A BUILDABLE SITE. THE ABUTTING K.M.C. ROAD WIDTH IS 9.2 M. ON THE NORTH SIDE & 1.273 M. ON THE WEST SIDE . DURING DEPTT. INSPECTION SITE WAS IDENTIFIED BY ME IT IS NOT A TANK OR FILLED UP TANK AND BOUNDED BY BOUNDARY WALL.

NAME OF THE ARCHITECT
SOMALI GUHA , REGN. NO. - CA/92/14663.

DECLARATION OF STRUCTURAL ENGINEER

THE STRUCTURAL DESIGN AND DRAWING OF BOTH FOUNDATION AND SUPER - STRUCTURE OF THE BUILDING HAS BEEN MADE BY ME ON THE BASIS OF SOIL INVESTIGATION REPORT MADE BY MOYTEC AT 67/1B , GRAHAM ROAD, KOLKATA-700040. SIGNED BY SANJIV J.PAREKH CONSIDERING THAT ALL POSSIBLE LOADS INCLUDING THE SEISMIC LOADS AS PER NATIONAL BUILDING CODE OF INDIA LATEST REVISION AND CERTIFIED THAT IT IS SAFE AND STABLE IN ALL RESPECT.

NAME OF STRUCTURAL ENGINEER
SANJIV J.PAREKH
M.E.(STRUCT), M.E.(CONST. ENG.), B.C.E,
FIE-(F-018202-4) E.S.E. NO. 104 (I) K.M.C

CERTIFICATE OF GEO-TECHNICAL ENGINEER

UNDERSIGNED, MOYTEC - RABIN KUMAR BANERJEE, 67/1B, GRAHAM ROAD, KOLKATA - 700040, HAS INSPECTED THE SITE AND CARRIED OUT SOIL INVESTIGATION THERE ON. IT IS CERTIFIED THAT THE EXISTING SOIL OF THE SITE IS ABLE TO CARRY THE LOAD COMING FROM THE PROPOSED CONSTRUCTION AND THE FOUNDATION SYSTEM PROPOSED HERE IN IS SAFE & STABLE IN ALL RESPECT FROM GEO-TECHNICAL POINT OF VIEW.

NAME OF GEOTECHNICAL ENGINEER
RABIN KUMAR BANERJEE, GT/I/28

DECLARATION OF OWNER

I DO HEREBY DECLARE WITH FULL RESPONSIBILITY THAT I SHALL ENGAGE ARCHITECT & E.S.E. DURING CONSTRUCTION WE SHALL FOLLOW THE INSTRUCTIONS OF ARCHITECT & E.S.E. DURING CONSTRUCTION OF THE BUILDING (AS PER B.S.PLAN) K.M.C. AUTHORITY WILL NOT BE RESPONSIBLE FOR STRUCTURAL STABILITY OF THE BUILDING & ADJOINING STRUCTURES. IF ANY SUBMITTED DOCUMENTS ARE FOUND TO BE FAKE, THE K.M.C. AUTHORITY WILL REVOKE THE SANCTION PLAN. THE CONSTRUCTION OF WATER RESERVOIR AND SEPTIC TANK WILL BE UNDERTAKEN THE GUIDANCE OF E.S.E/ARCHITECT BEFORE STARTING OF BUILDING FOUNDATION WORK. THE PLOT IS IDENTIFIED BY THE UNDERSIGNED, IF ANY DISPUTE ARISE REGARDING THE OWNERSHIP OF THE PLOT, K.M.C. AUTHORITY WILL NOT RESPONSIBLE AND WILL REVOKE SANCTION.

NAME OF THE OWNER
MR. ADITYA DALMIA
(C.A. OF M/S CONSOLIDATED RAYON LTD. & OTHERS)

GROUND FLOOR PLAN, 1ST FLOOR PLAN , 2ND TO 4TH FLOOR PLAN, ROOF PLAN, FRONT AND RIGHT SIDE ELEVATION, SECTION C-C,D-D. (REAR BLOCK)

PROJECT

PROPOSED G+VI (FRONT BLOCK - A) & G+IV (REAR BLOCK - B) STORIED RESIDENTIAL BUILDING PLAN U/S 393A OF K.M.C. ACT. 1980 COMPLYING K.M.C. BUILDING RULE 2009, AT PRE. NO. - 138, SARSUNA MAIN ROAD, WARD NO.- 126, BOROUGH NO.- XVI, KOLKATA - 700061. UNDER K.M.C.

NAME OF THE OWNER:- MR. ADITYA DALMIA (C.A. OF M/S CONSOLIDATED RAYON LTD. & OTHERS)

DATE	DEALT	SCALE
09.08.2023	P. S.	SCALE - 1:100.

N

SGA CONSULTANCY SERVICES
architects * engineers * planners

`GUNJAN', 1ST. FLOOR, P-17 MITRA COLONY,
JAMES LONG SARANI, KOLKATA-700034.
PHONE NO - 33355-36249.
E-MAIL ID: contact@sgacsindia.com